2052980, 2052981
2052984, 2052985

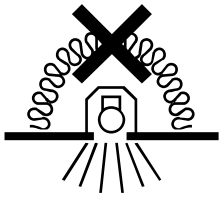

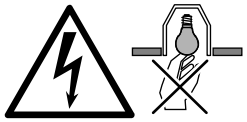

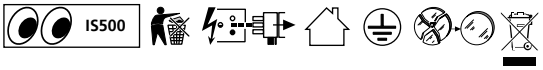

460 x 440 x 190

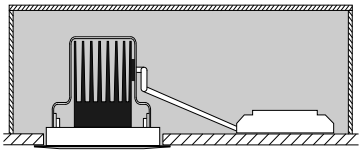

1

2052879 - 2052886
2052895 - 2052898
2052903 - 2052906
2052911 - 2052912

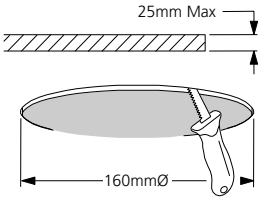

2052887 - 2052894
2052899 - 2052902
2052907 - 2052910
2052913 - 2052914

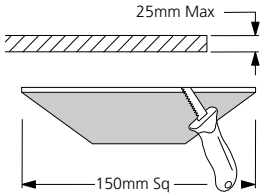

2 230-240V~ 1.0mm² Min

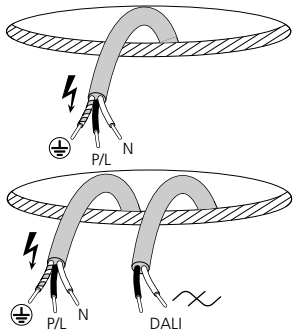

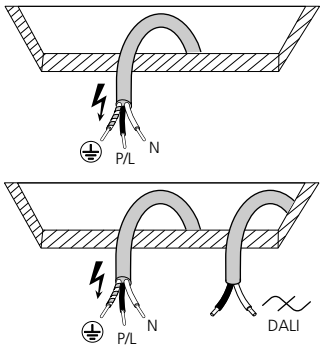

3 230-240V~

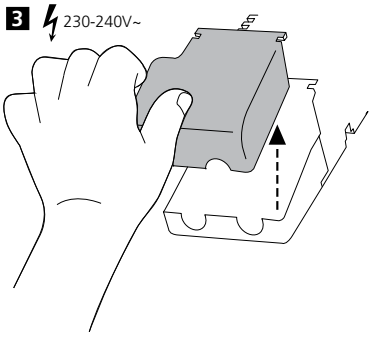

4a 230-240V~

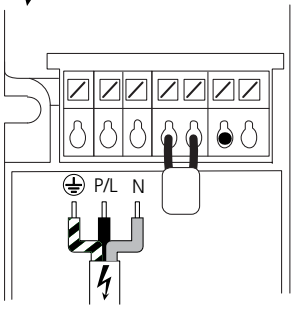

4b 230-240V~ + DALI

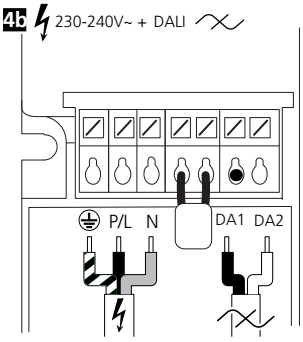

4c 230-240V~ + SSC

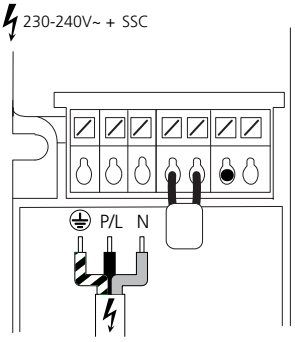

5

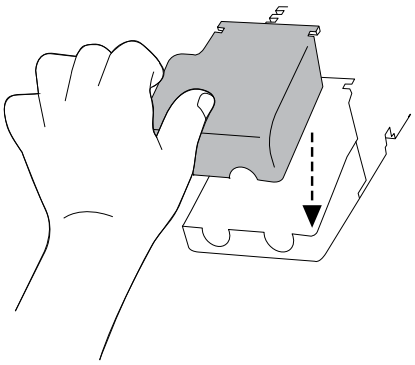

6

i

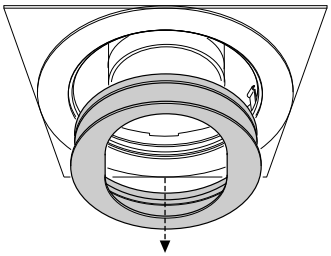

ii

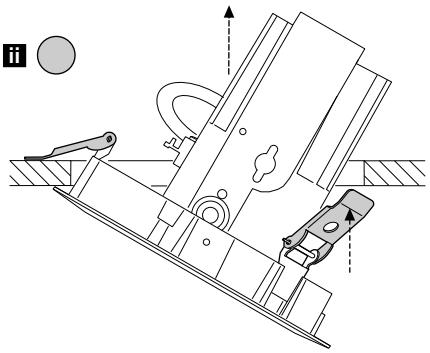

ii

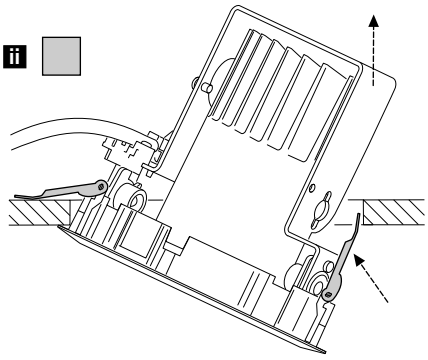

7

i

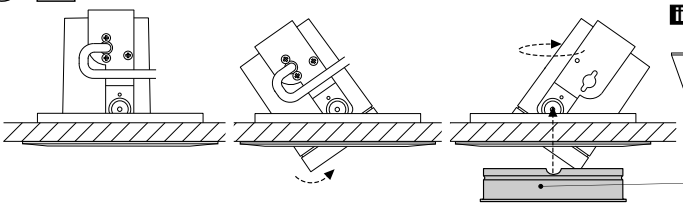

ii

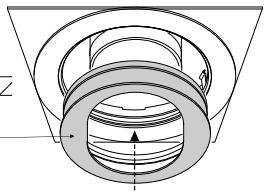

Concord by SYLVANIA

© Concord Lighting Limited 11.19