IS500 | 12 V | <1 mW | 5.8 Ghz | IP65

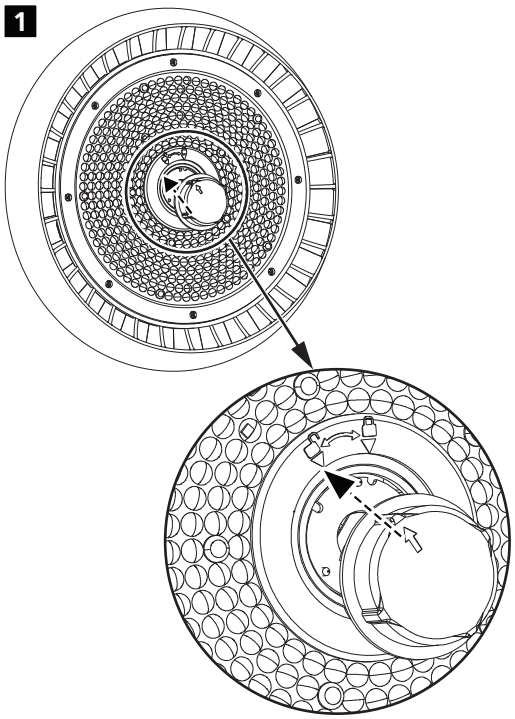

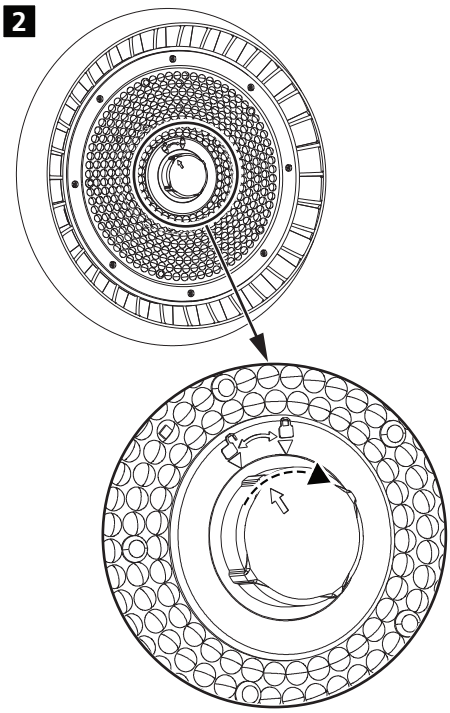

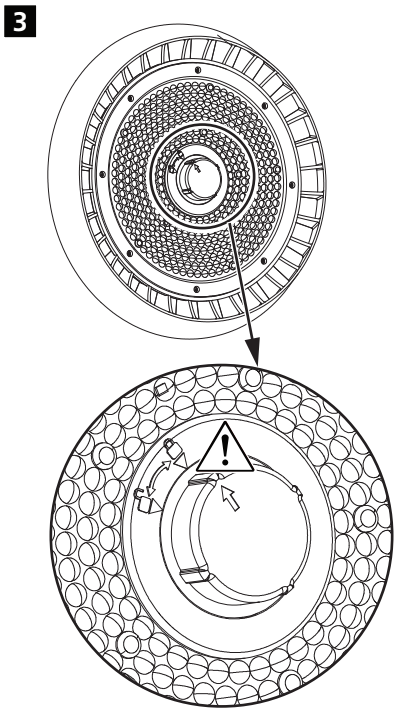

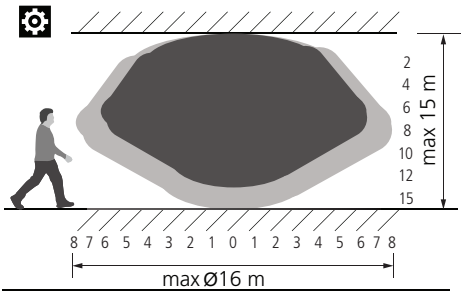

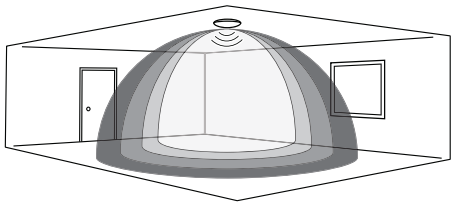

Detection area(100%)
10/50/100%

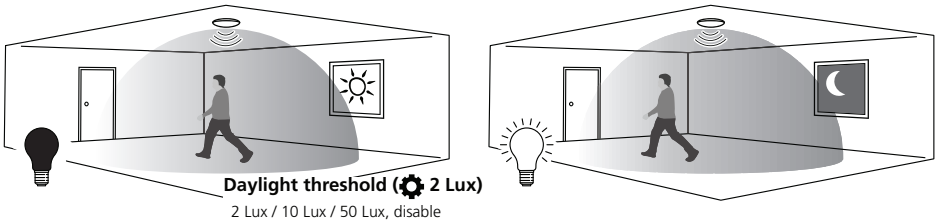

Daylight threshold (2 Lux)
2 Lux / 10 Lux / 50 Lux, disable

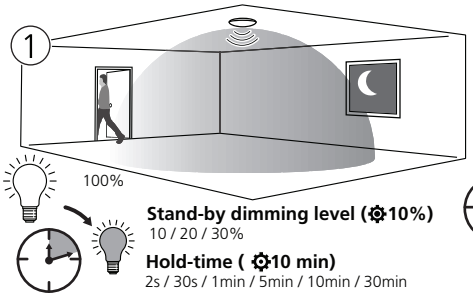

Stand-by dimming level (10%)
10 / 20 / 30%

Hold-time (10 min)
2s / 30s / 1min / 5min / 10min / 30min

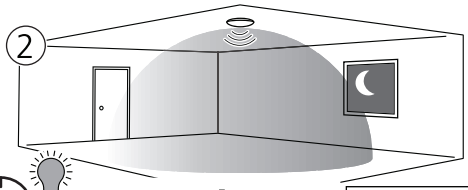

Stand-by time (10 min)
0s / 10s / 1min / 10min / 30min / + ∞

10 / 20 / 30%

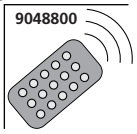

SC1	100%	10min	10min	10%	2Lux
SC2	100%	5min	10min	10%	2Lux
SC3	100%	10min	30min	10%	10Lux
SC4	100%	10min	+∞	10%	50Lux